Paulmann

Safety Instructions

0, 1, 6, 8, 11, 12, 15, 22, 23, 25, 28

Info Hotline +49 (0) 5041 998 389
Mon.-Do. 7⁰⁰-20⁰⁰
Fr. 7⁰⁰-17⁰⁰

Paulmann Licht GmbH
31832 Springe / Germany
www.paulmann.com

Art.-Nr.:
703.19
703.22

(+MA 173)
POW11/12

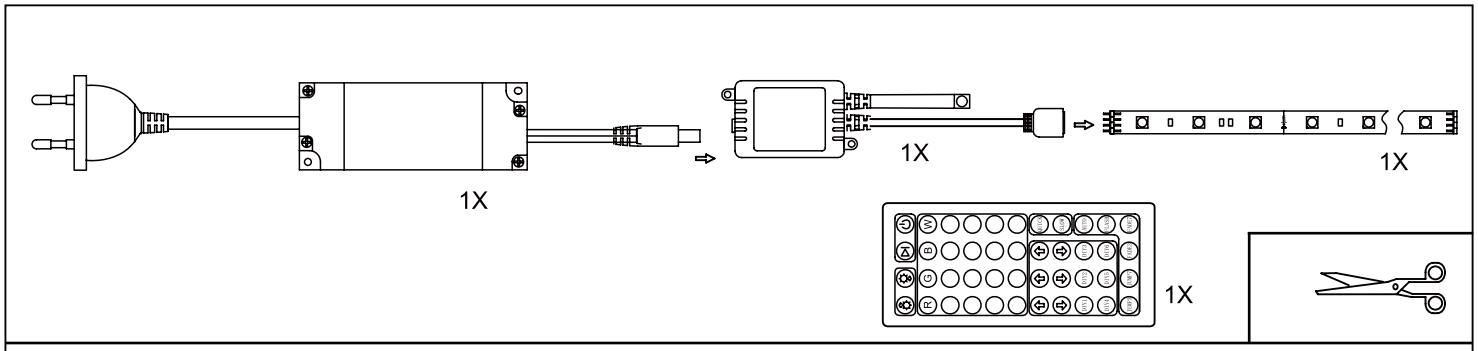

A

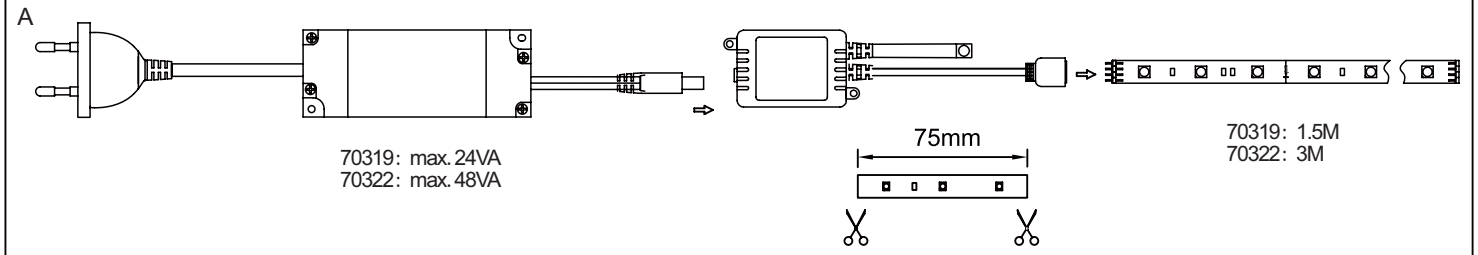

B

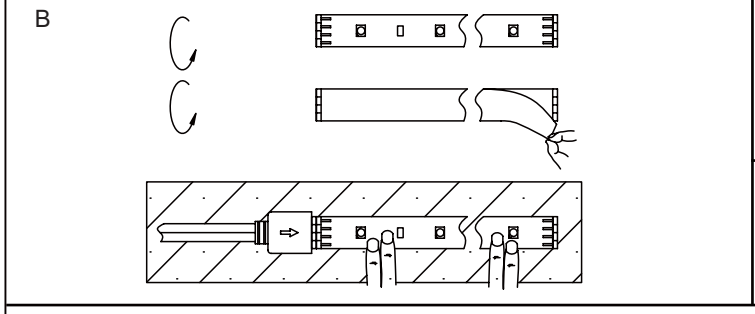

C

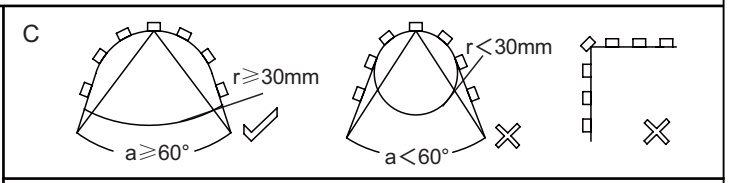

D

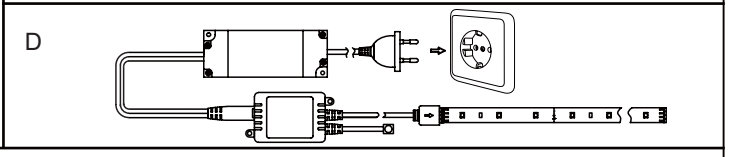

E

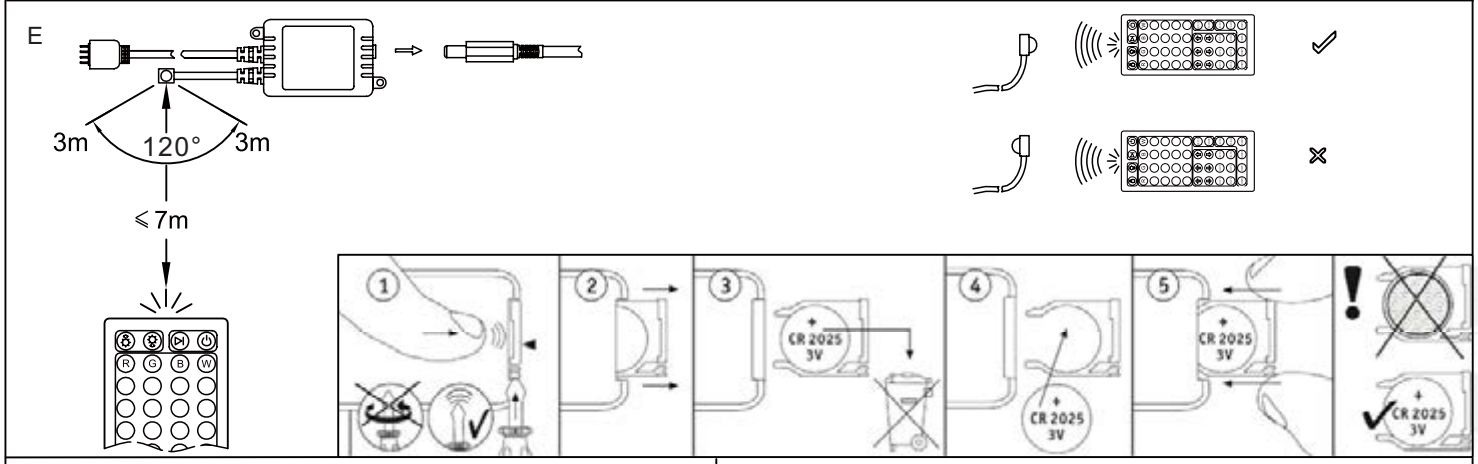

F

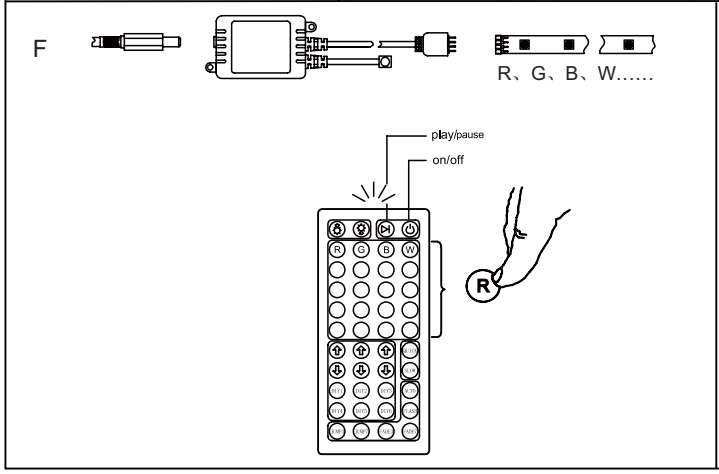

G

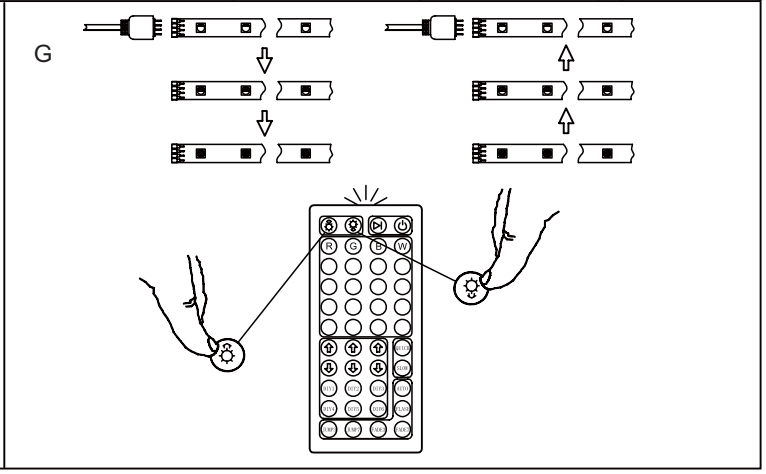

H

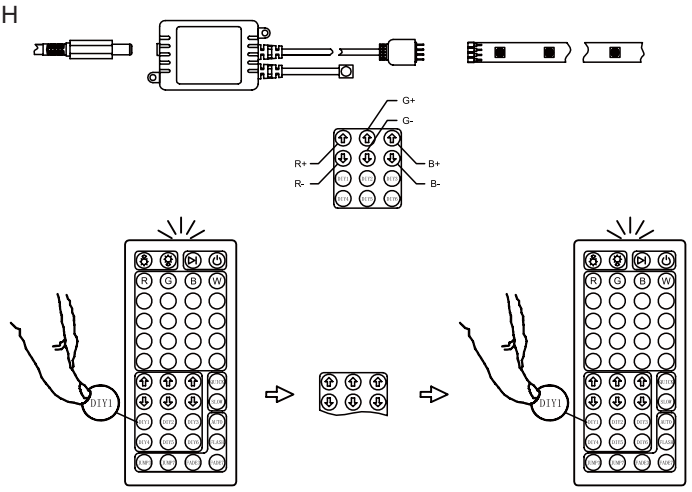
G+
G-
R+
R-
B+
B-
DIY1

I

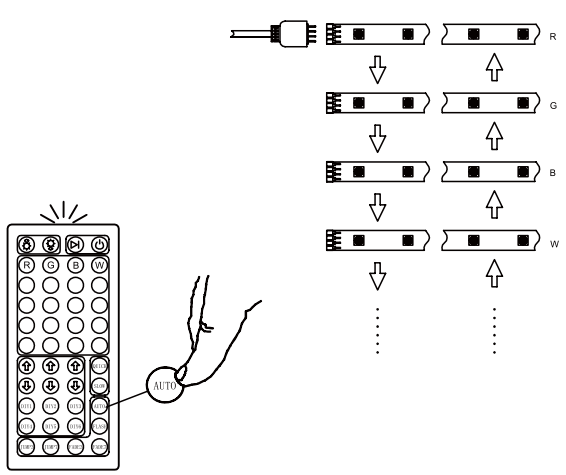
R
G
B
W
AUTO

J

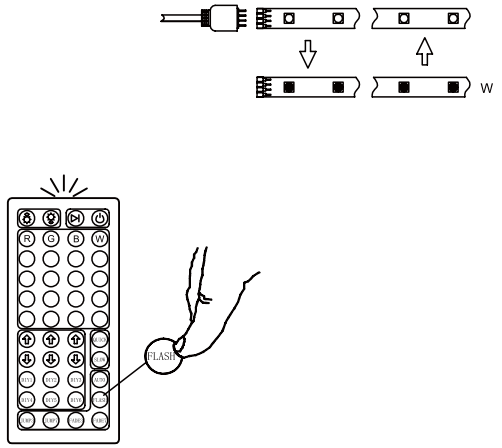
W
FLASH

K

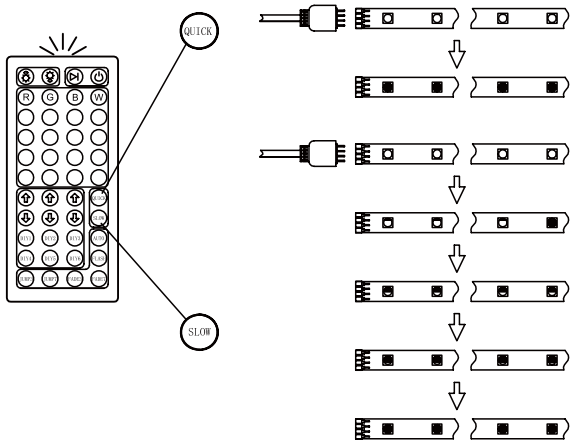
QUICK
SLOW

L

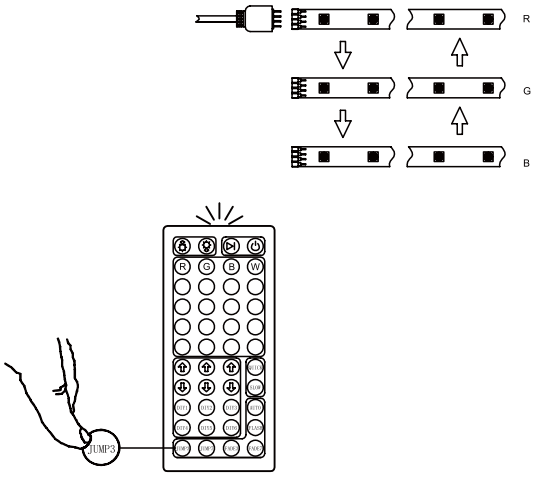
R
G
B
JUMP3

M

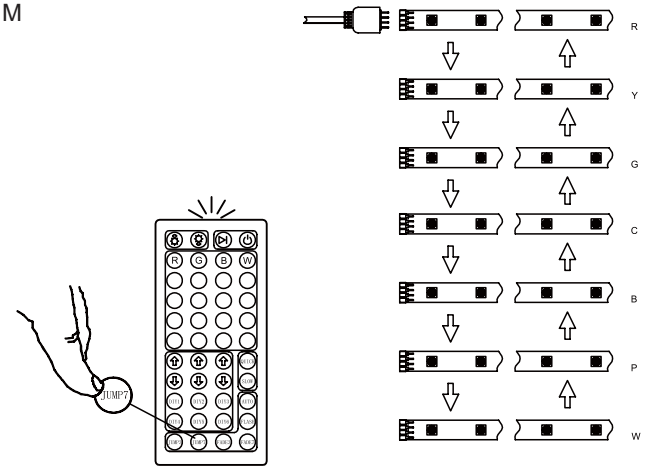
R
Y
G
C
B
P
W
JUMP7

N

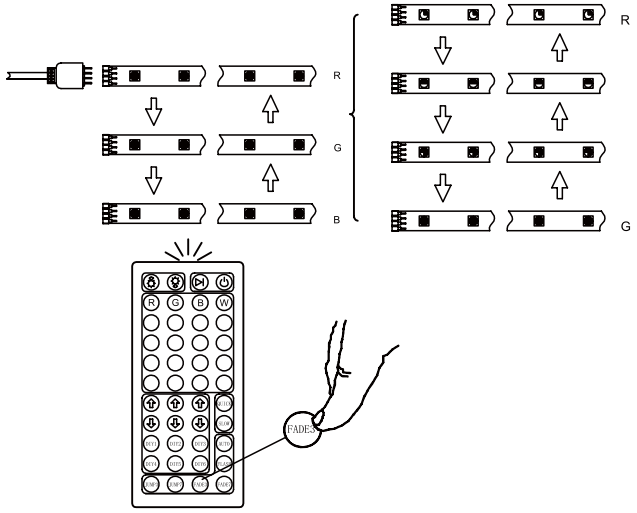
R
G
B
FADE3

O

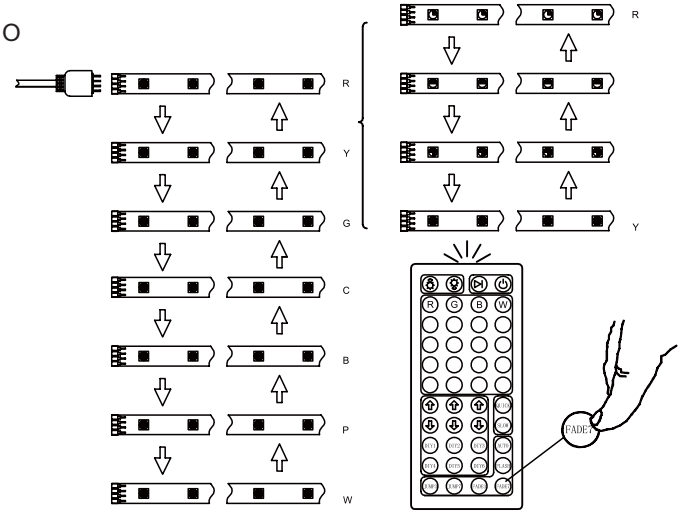
R
Y
G
C
B
P
W
FADE7